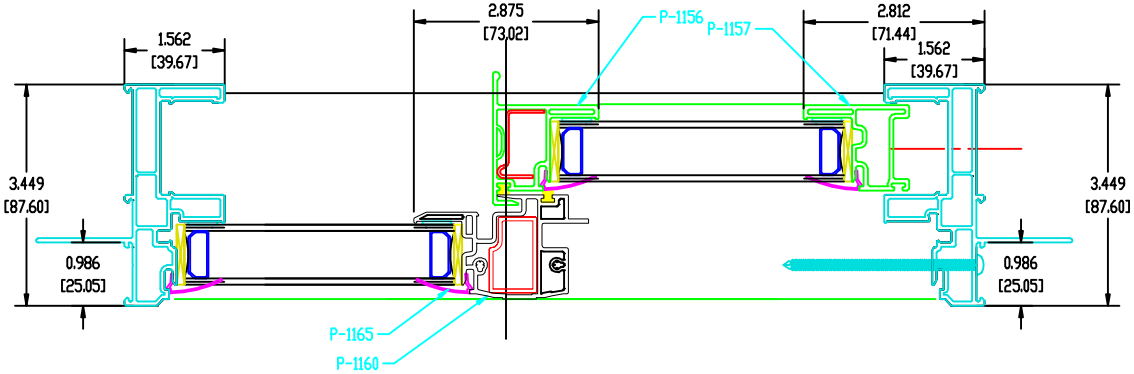

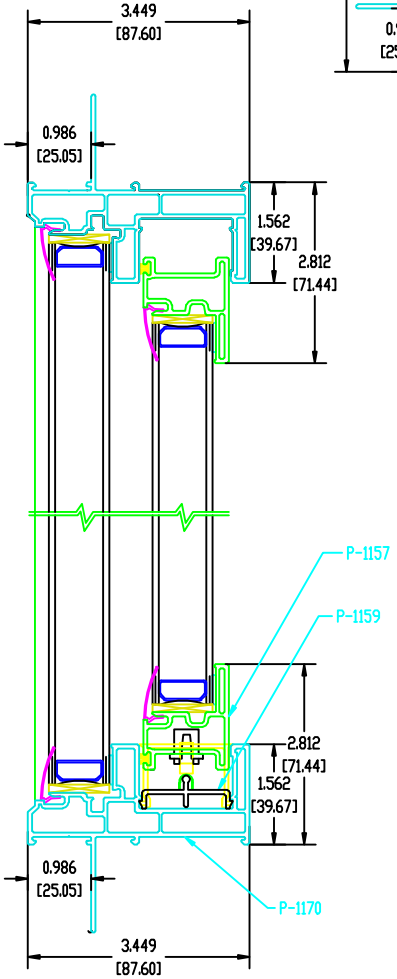

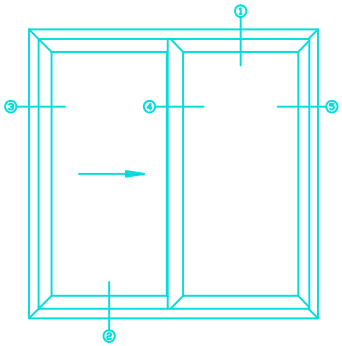

Green World WINDOW &DOOR CORP.

GWDH onding Inc.

Designed: Y.S.Q	Date: 01/15/07
Scale: 1/1	Rev: 08/13/07
Part Name: ASSEMBLY	

Project Title: NAILON Slider

Project No: A-3200-SL